Avery Weigh-Tronix

ZM 400 SERIES

Indicators that adapt to your application and provide measurement and control to your operations.

Technical Specification

ETHERNET

USB

SERIAL

ZM401
IP69K Stainless Steel Enclosure
IBN Display

IP69K

ZM405
IP69K Stainless Steel Enclosure
IBN Display

IP69K

DESCRIPTION

These high performance, multi-function programmable indicators give you the flexibility to adapt them for your applications.

Suitable for the office, dusty, wet or high pressure and heavy washdown environments, the ZM400 series can display analyze, store, and transmit data across a range of technology methods to meet your specific installation.

SPECIFICATIONS

GENERAL

Operating Applications	
Unit of Measure	Four active choices (Pounds, Kilograms, Ounce, Gram, Pound/Ounce, Custom)
Capacity Selections	9,999,999 with decimal located zero to five places
Incremental Selections	Multiples and sub-multiples of 1, 2, 5
Multi Range/Multi Interval	Up to three independent weight ranges and divisions
Programmable Selections	Zero range, motion detection, automatic zero tracking, eight point linearization
Time and Date	Battery backed up time/date/year (12 hour AM/PM or 24 hour format)
Calibration	Two to ten points
Analog to Digital Measurement Rate	100 Hz
Internal Resolution	53,687,100 counts per mV/V per second
Digital Filtering	Harmonizer filtering with adaptable constant and threshold
Self Diagnostics	Display, keys, inputs, outputs, serial port, scale A to D, USB port and option cards
Dynamic Weighing	Minimum nominal weigh time 100 milliseconds, recommended minimum three hundred milliseconds
Programming Language	Avery Weigh-Tronix LUA, GSE Macro

USER INTERFACE

Keypad	ZM401 6 key and ZM405 24 key chemical resistant keypad with metal domed tactile feedback and audio confirmation when pressed
Operational Keys	*ZM401: Zero, Print, Units, Tare, Select, and F1* *ZM405: Zero, Print, Units, Tare, Sample, Setup, F1/ID, Scale, Target, Start, Stop, 0-9, Alpha, Decimal, Clear, and common symbols.*
Status Annunciators	Center of Zero, Motion, Battery status, Set point 1,2,3, Over/Under/Accept bar graph or fill bar graph, Preset Tare, Active Ethernet connection. Additional annunciators are shown in the dot matrix display area.
Display	IBN illuminated: seven digit, nine segment display, green characters with black background 0.8" (20 mm) high digits and Graphic Array used for Annunciators, mode identification and HMI (Human Machine Interface). Sort bar/Checkweigher segments
Display Rate	Selectable (1, 2, 5, 10, 20) times per second

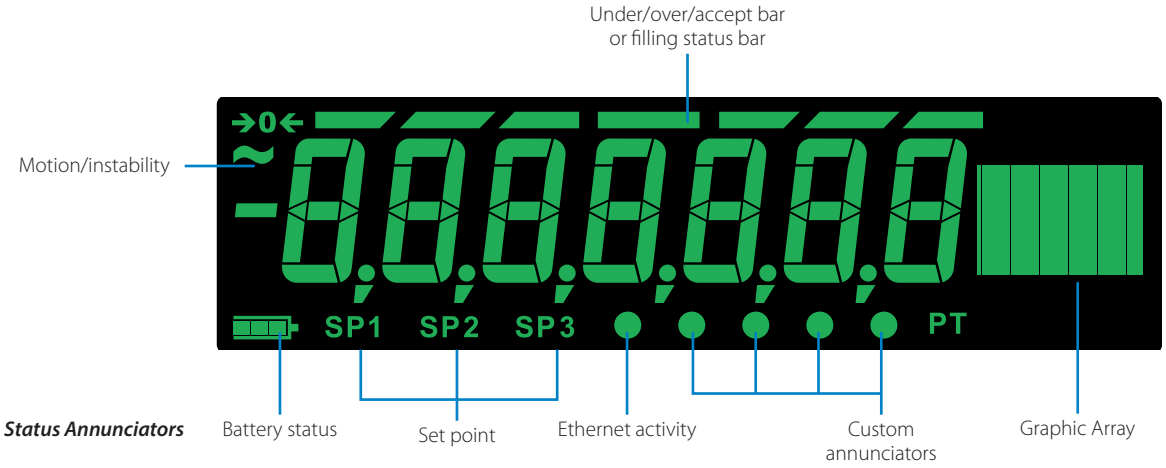

PHYSICAL

Enclosures	*Stainless steel:* 304 brushed stainless steel (IP69K certified) with GORE® Vent ventilation and tilt stand with provisions for desk, wall and column mounting
Operating Temperature	14° F to 104° F / -10° C to 40° C (Compliance with legal for trade requirements) -4° F to 140° F / -20° C to 60° C (Industrial) 10 to 90% humidity non condensing
Shipping Weight	Stainless steel: 8.09 lb (4.05 kg)
Dimensions (L X W X H)	*Stainless steel:* 9.6" x 5" x 8.8" (243 mm x 127 mm x 223 mm) *Panel mount: 8.7" x 3.4" x 6.9" (221 mm x 86 mm x 175 mm)*

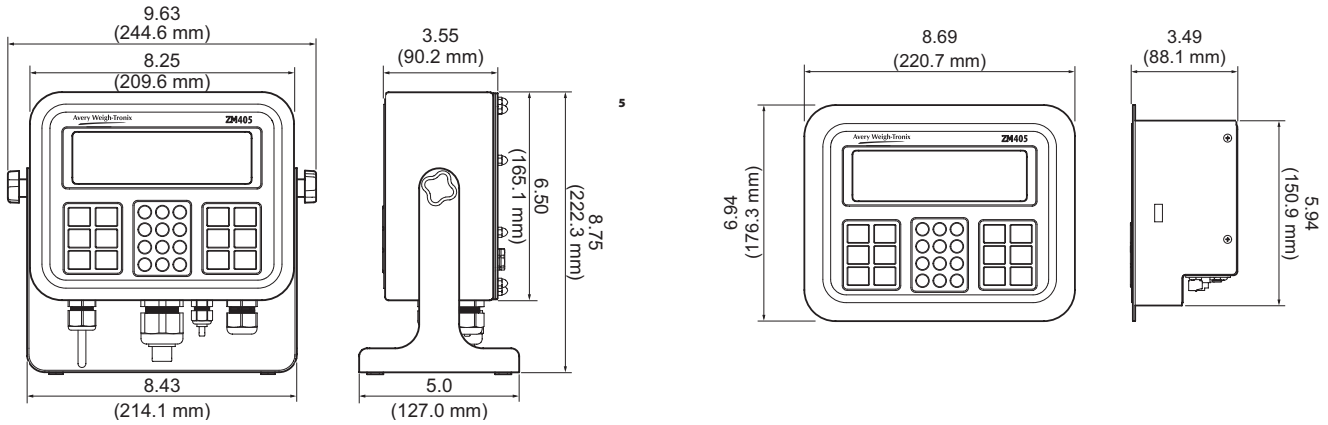

Stainless Steel IP69K

INPUT/OUTPUT

Remote Inputs	Three TTL or voltage free logic level inputs can be received for basic key functions or application program events
Standard Outputs	Three outputs can be used for system variable setpoints or in combination with application program events
Serial Ports	Two serial ports: - Comm 1 RS232 full duplex - Comm 2 RS232 full duplex Or - Comm 1 RS232 full duplex with handshaking - Comm 2 Not available Manual and Autoprint function plus programmable Input Interpreter Supports SMA, ENQ and NCI command/response protocols
USB Host	Printer USB flash memory Remote USB keyboard
Ethernet	The Ethernet port can be configured to support five independent devices, it supports DHCP client/server and Ethernet sockets plus it supports all the serial protocols
Fieldbus	Ethernet IP and Modbus TCP

ELECTRICAL

Power Requirements	Line voltage: 90-264 VAC (110-240 VAC nominal), frequency 50 or 60 Hz, 12 to 36 VDC Power consumption: estimated at 250mA at 12VDC for one 350 ohm weigh sensor and 600mA at 12VDC for fourteen 350 ohm weigh sensors.
Excitation	10 VDC(+/-5 VDC), short circuit protected Supports up to sixteen 350 ohm weight sensors (two scales) 4 or 6 conductors with sense leads Detachable plug connectors
Analog Signal Input Range	-1 m/V/V to 5 mV/V
Analog Signal Sensitivity	0.1 µV/V/divisions minimum 0.5 µV/V/divisions recommended
Circuitry Protection	RFI, EMI and ESD protection (10 V/M minimum RFI noise immunity)

OPTIONS

Option Kits (choose one*)	*Analog output kit:* 0-5 VDC, 0-10 VDC and 4-20 mA* *Current loop kit:* Current loop and RS485/RS422* *USB device kit:* Provides USB interface to PC* *Wireless (Ethernet) internal kit:* 802.11b/g wireless data communications kit with antenna* Internal 120 VAC Relay module for IP69K model* Scale Input 5 VDC excitation kit* Scale Input 10 VDC excitation with STVS kit* External I/O interface kit* DC Output, 4 relays 3-60VDC at 2A Kit* DC Input, 4 Inputs 4-30VDC kit* AC Output, 4 relays 20-240VAC at 1A kit* (IP69K models) AC Input, 4 Inputs 120-240VAC kit* (IP69K models) Severe Transient Voltage Suppressor (STVS)
ZM-OPTO	Provides setpoint interface
USB Watertight Gland	Rubberized and sealed
Ethernet Watertight Gland	Rubberized and sealed

APPROVALS

Patent	US Patent 672,262
Agencies **pending*	EC UK* NTEP (US) Class III/IIIL 10,000 d (CC# 14-039) OIML R76 Class III and IIII* Measurement Canada (AM-5955C) Australia* South Africa* New Zealand* India* CE* UL/C-UL IP69K (case)

Measurement Canada Approved

Australian Government National Measurement Institute

Ministry of Business, Innovation & Employment

Avery Weigh-Tronix

www.averyweigh-tronix.com

Avery Weigh-Tronix is an ITW company

Intel and Intel Core are trademarks of Intel Corporation in the U.S. and/or other countries

Avery Weigh-Tronix is a trademark of the Illinois Tool Works group of companies whose ultimate parent company is Illinois Tool Works Inc ("Illinois Tool Works"). Copyright © 2015 Illinois Tool Works. All rights reserved. This publication is issued to provide outline information only and may not be regarded as a representation relating to the products or services concerned. This publication was correct at the time of going to print, however Avery Weigh-Tronix reserves the right to alter without notice the specification, design, price or conditions of supply of any product or service at any time.

zm400series_spec_501391.indd
V1 AWT35-501391